MEMORANDUM

TO: AL BARBER, HINESBURG FIRE CHIEF

FROM: PAUL O'LEARY

SUBJECT: HANNAFORD LADDER TRUCK ACCESS

DATE: FEBRUARY 7, 2013

CC:

Chief Barber –

In response to your questions about the large ladder truck access, we have examined the movements generated by the new 105' Pierce Heavy duty ladder truck which has been ordered by the Village of Essex Junction (see attached spec sheet and turning performance analysis). Please note that a ladder truck is not a typical AASHTO vehicle so our analysis has used a coach bus instead. The coach bus has a wheelbase of 28' 6" compared to the ladder truck wheelbase of 20' 5", a length of 45' compared to 39'-8"' for the ladder truck and a minimum turning radius of 44' as compared to 39'9" for the ladder truck.

As seen by the accompanying drawings, we expect that a large ladder truck will easily be able to access all sides of the building that have a paved drive. The width of the drives should be more than sufficient to accommodate the ladder trucks' required outrigger width of 14'.

O'Leary-Burke Civil Associates, PLC

1 Corporate Drive, Suite #1 Essex Jct., VT 05452

802-878-9990 Fax 802-878-9989 poleary@olearyburke.com

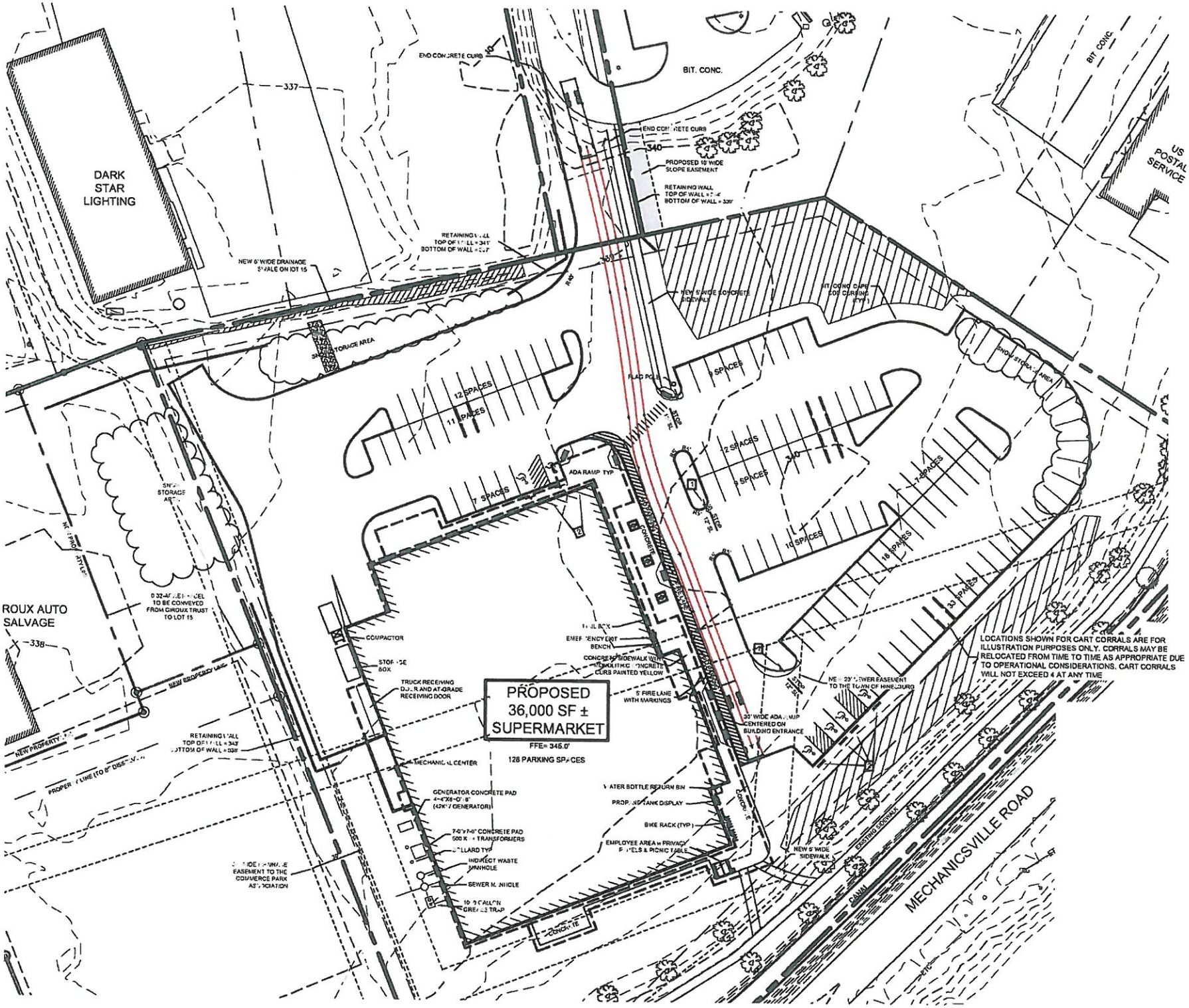
DARK STAR LIGHTING
BIT. CONC.
US POSTAL SERVICE
END CONCRETE CURB
PROPOSED 10' WIDE SLOPE EASEMENT
RETAINING WALL
NEW 6' WIDE DRAINAGE SWALE ON LOT 15
NEW 5' WIDE CONCRETE SIDEWALK
SNOW STORAGE AREA
FLAG POLE
12 SPACES
11 SPACES
9 SPACES
7 SPACES
10 SPACES
18 SPACES
33 SPACES
ADA RAMP TYP
CONCRETE
ROUX AUTO SALVAGE
COMPACTOR
TRUCK RECEIVING DOOR AND AT-GRADE RECEIVING DOOR
PROPOSED 36,000 SF ± SUPERMARKET
FFE= 345.0'
128 PARKING SPACES
5' FIRE LANE WITH MARKINGS
30' WIDE ADA RAMP CENTERED ON BUILDING ENTRANCE
LOCATIONS SHOWN FOR CART CORRALS ARE FOR ILLUSTRATION PURPOSES ONLY. CORRALS MAY BE RELOCATED FROM TIME TO TIME AS APPROPRIATE DUE TO OPERATIONAL CONSIDERATIONS. CART CORRALS WILL NOT EXCEED 4 AT ANY TIME
MECHANICAL CENTER
GENERATOR CONCRETE PAD
BIKE RACK (TYP.)
EMPLOYEE AREA w PRIVACY PANELS & PICNIC TABLE
NEW 5' WIDE SIDEWALK
EXISTING SIDEWALK
CANAL
MECHANICSVILLE ROAD
NEW PROPERTY LINE
337
340
338

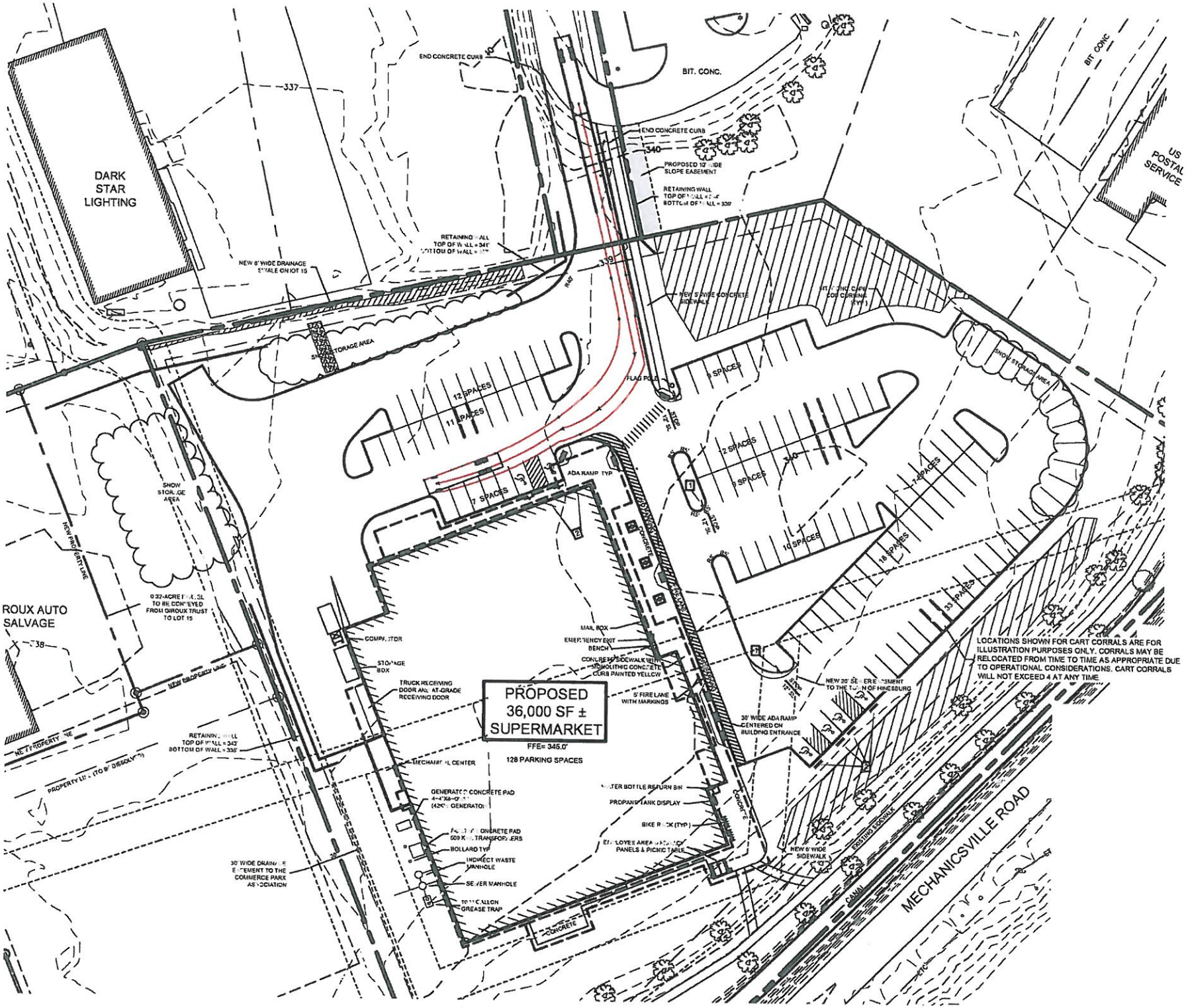
DARK STAR LIGHTING
END CONCRETE CURB
BIT. CONC.
BIT CONC
US POSTAL SERVICE
337
340
339
PROPOSED 10' WIDE SLOPE EASEMENT
RETAINING WALL
NEW 8' WIDE DRAINAGE SWALE ON LOT 15
NEW 5' WIDE CONCRETE SIDEWALK
SNOW STORAGE AREA
FLAG POLE
12 SPACES
11 SPACES
7 SPACES
2 SPACES
8 SPACES
10 SPACES
18 SPACES
17 SPACES
33 SPACES
ADA RAMP TYP
SNOW STORAGE AREA
NEW PROPERTY LINE
ROUX AUTO SALVAGE
0.32 ACRE PARCEL TO BE CONVEYED FROM GIROUX TRUST TO LOT 15
COMPACTOR
STORAGE BOX
TRUCK RECEIVING DOOR AND AT-GRADE RECEIVING DOOR
MAIL BOX
EMERGENCY EXIT BENCH
CONCRETE SIDEWALK WITH MONOLITHIC CONCRETE CURB PAINTED YELLOW
PROPOSED 36,000 SF ± SUPERMARKET
FFE= 345.0'
128 PARKING SPACES
6' FIRE LANE WITH MARKINGS
NEW 20' SEWER EASEMENT TO THE TOWN OF HINESBURG
LOCATIONS SHOWN FOR CART CORRALS ARE FOR ILLUSTRATION PURPOSES ONLY. CORRALS MAY BE RELOCATED FROM TIME TO TIME AS APPROPRIATE DUE TO OPERATIONAL CONSIDERATIONS. CART CORRALS WILL NOT EXCEED 4 AT ANY TIME
30' WIDE ADA RAMP CENTERED ON BUILDING ENTRANCE
RETAINING WALL TOP OF WALL = 343' BOTTOM OF WALL = 339'
MECHANICAL CENTER
GENERATOR CONCRETE PAD
(42KW GENERATOR)
WATER BOTTLE RETURN BIN
PROPANE TANK DISPLAY
BIKE RACK (TYP)
EMPLOYEE AREA WITH PANELS & PICNIC TABLE
BOLLARD TYP
INDIRECT WASTE MANHOLE
SEWER MANHOLE
TOMCALLON GREASE TRAP
30' WIDE DRAINAGE EASEMENT TO THE COMMERCE PARK ASSOCIATION
PROPERTY LINE TO BE DISSOLVED
NEW 6' WIDE SIDEWALK
EXISTING SIDEWALK
CANAL
MECHANICSVILLE ROAD
CONCRETE

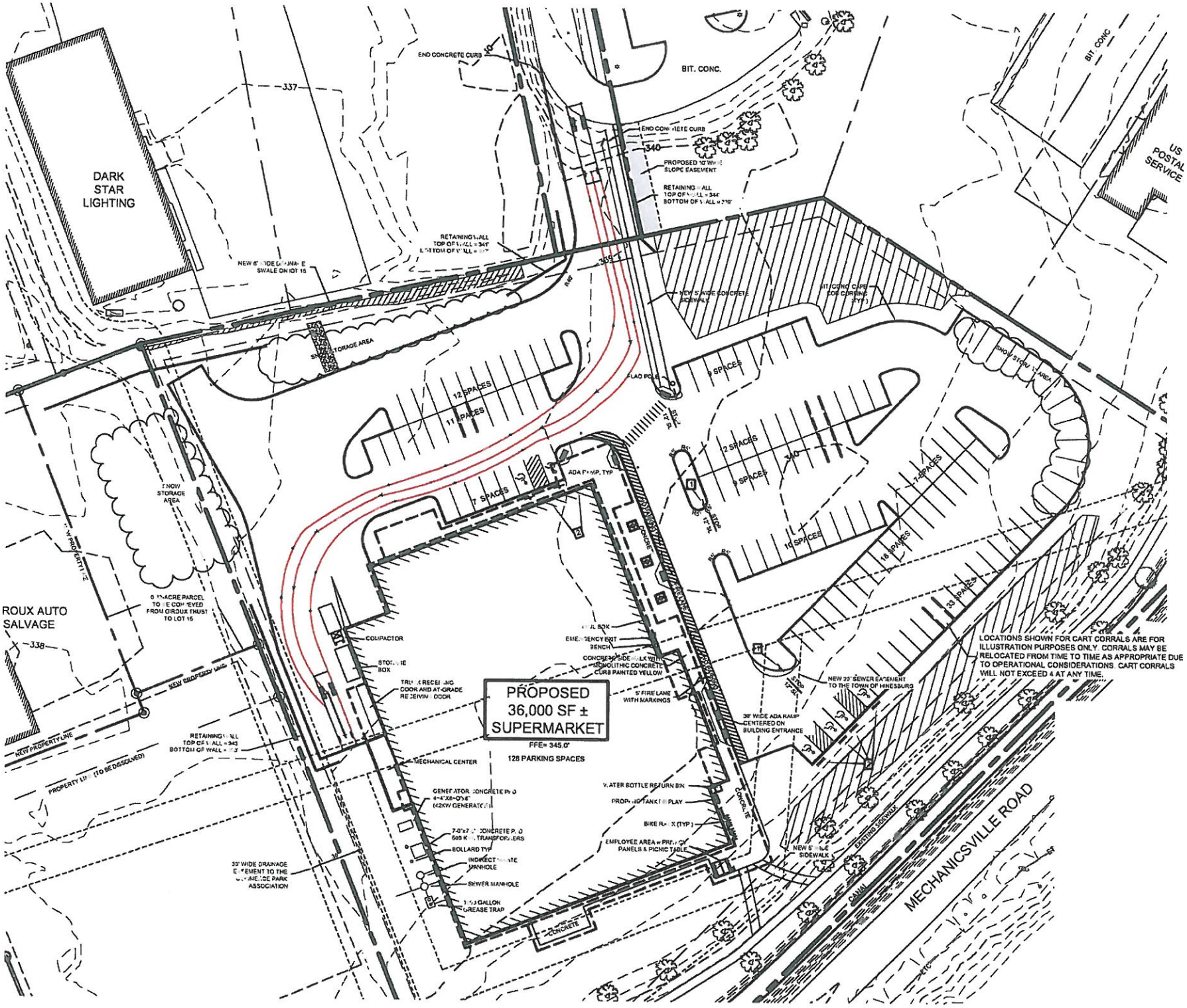

DARK STAR LIGHTING
BIT. CONC.
US POSTAL SERVICE
END CONCRETE CURB
PROPOSED 10' WIDE SLOPE EASEMENT
RETAINING WALL
NEW 5' WIDE CONCRETE SIDEWALK
SNOW STORAGE AREA
FLAG POLE
12 SPACES
11 SPACES
9 SPACES
12 SPACES
9 SPACES
7 SPACES
7 SPACES
10 SPACES
18 SPACES
33 SPACES
ADA RAMP, TYP
ROUX AUTO SALVAGE
COMPACTOR
STORAGE BOX
TRUCK RECEIVING DOOR AND AT-GRADE RECEIVING DOOR
PROPOSED 36,000 SF ± SUPERMARKET
FFE= 345.0'
128 PARKING SPACES
MECHANICAL CENTER
GENERATOR CONCRETE PAD
BOLLARD TYP
INDIRECT WASTE MANHOLE
SEWER MANHOLE
GREASE TRAP
CONCRETE
5' FIRE LANE WITH MARKINGS
30' WIDE ADA RAMP CENTERED ON BUILDING ENTRANCE
NEW 20' SEWER EASEMENT TO THE TOWN OF HINESBURG
WATER BOTTLE RETURN BIN
BIKE RACK (TYP)
EMPLOYEE AREA w PRIVACY PANELS & PICNIC TABLE
NEW 5' WIDE SIDEWALK
EXISTING SIDEWALK
CANAL
MECHANICSVILLE ROAD
NEW PROPERTY LINE
PROPERTY LINE (TO BE DISSOLVED)
LOCATIONS SHOWN FOR CART CORRALS ARE FOR ILLUSTRATION PURPOSES ONLY. CORRALS MAY BE RELOCATED FROM TIME TO TIME AS APPROPRIATE DUE TO OPERATIONAL CONSIDERATIONS. CART CORRALS WILL NOT EXCEED 4 AT ANY TIME.

Turning Performance Analysis

10/23/2006

Configuration: 105' HDL Aerial, Cat C13 Engine
Number: 18818 **V:** 78

Representative: Brogdon, Danny
Organization: Ten-8 Fire Equipment, Inc
Department: City of Sandy Springs

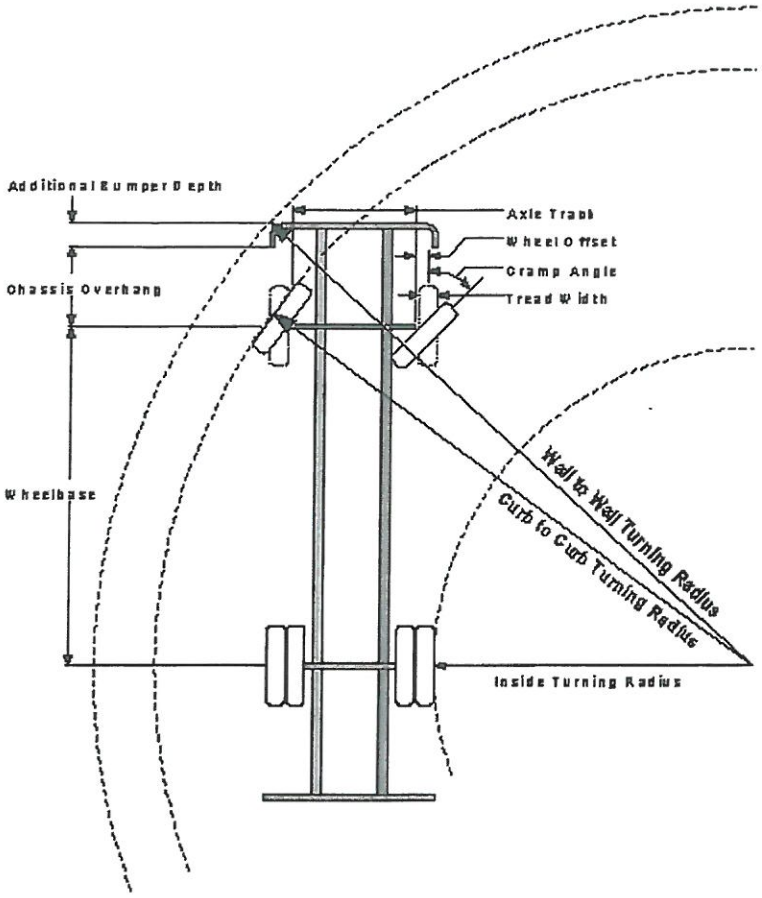

Parameters:

Inside Cramp Angle:	45°
Axle Track:	85.34"
Wheel Offset:	4.68"
Loaded Tire Width:	17.70"
Chassis Overhang:	65.99"
Additional Bumper Depth:	19.00"
Front Overhang	84.99"
Wheelbase:	245.50"

Calculated Turning Radii:

Inside Turn:	231.97"
Curb to Curb:	425.51"
Wall to Wall:	477.30"

Comments:

Aerial Application

Components	Item #	Description
Front Axle	0018453	Axle, Suspension, Front, Oshkosh TAK-4, Non-Drive, 22,800 lb
Front Wheels	0111380	Aluminum, Alcoa, 22.50 x 12.25
Front Tires	0111370	Michelin, 425/65R22.50, 20 Ply, XTE2
Chassis	0104774	Dash® 2000 Chassis
Front Bumper	0107610	Tray, Bumper, Passenger Side, Standard, 19" W x 14.5" L x 13" D
Aerial Device	0120995	Aerial, 105' Heavy Duty Ladder

Notes:

Actual Inside Cramp Angle may be less due to highly specialized options.

Curb to Curb turning radius calculated for a 9.00 inch curb.

Turning Performance Analysis

10/23/2006

Configuration: 105' HDL Aerial, Cat C13 Engine
Number: 18818 **V:** 78

Representative: Brogdon, Danny
Organization: Ten-8 Fire Equipment, Inc
Department: City of Sandy Springs

Definitions:

Inside Cramp Angle	Maximum turning angle of the front inside tire.
Axle Track	King-pin to king-pin distance of the front axle.
Wheel Offset	Offset from the center-line of the wheel to the king-pin.
Tread Width	Width of the tire tread.
Chassis Overhang	Distance from the center-line of the front axle to the front edge of the cab. This does not include the bumper depth.
Additional Bumper Depth	Depth that the bumper assembly adds to the front overhang.
Wheelbase	Distance between the center lines of the vehicle's front and rear axles.
Inside Turning Radius	Radius of the smallest circle around which the vehicle can turn.
Curb to Curb Turning Radius	Radius of the smallest circle inside of which the vehicle's tires can turn. This measurement assumes a curb height of 9 inches.
Wall to Wall Turning Radius	Radius of the smallest circle inside of which the entire vehicle can turn. This measurement takes into account any front overhang due to the chassis, bumper extensions and/or aerial devices.

105' Heavy Duty Ladder

Overview

More reach. Same Pierce Performance.

105' Heavy Duty Ladder

The Pierce 105' steel aerial ladder features a rated load capacity of up to 750 lbs. in winds up to 50 mph. This apparatus is engineered with a replaceable egress fly section, H-style stabilizers, and an interlock system that prevents rotation of the ladder on the short-set side – just a few of the features that set this ladder apart.

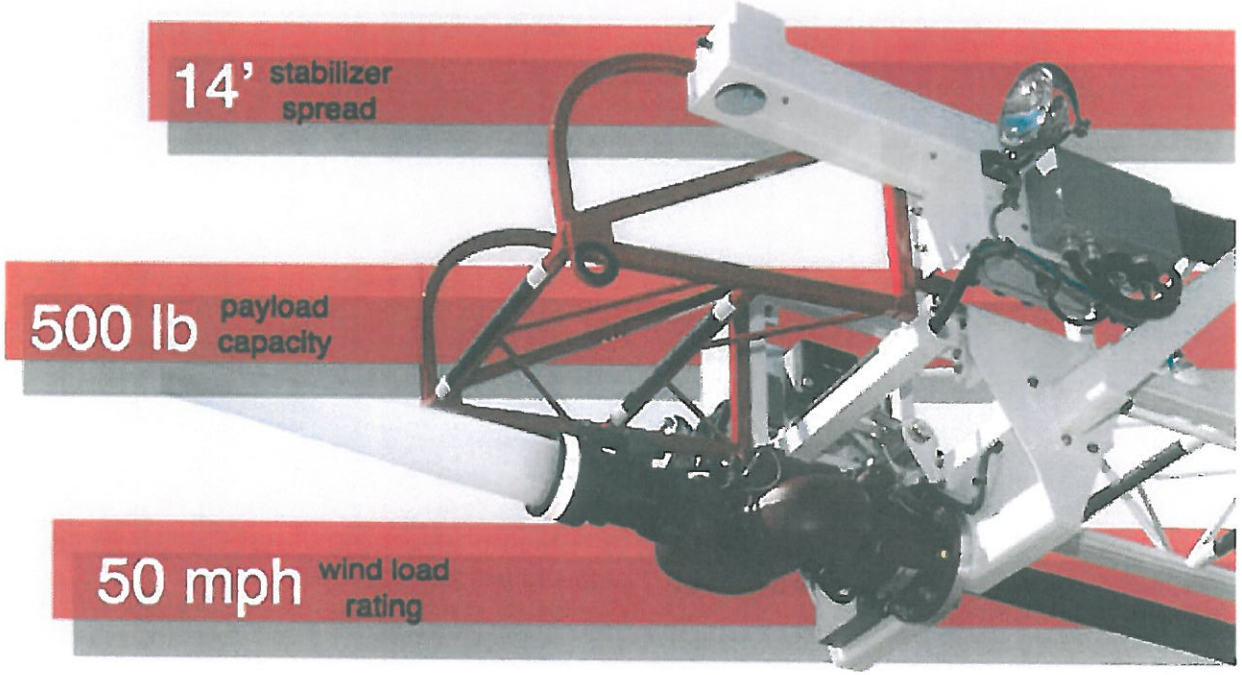

Aerial Ladders Brochure >>

Features

Highlights

105' Heavy Duty Ladder

- Short stabilizer spread only 14'
- Up to 750 lb. tipload rating - not including equipment
- Wind load rating of 50 mph

More Features

- Clear walking areas with all hoses, wire harnesses and cables routed inside of sealed base rails and between sections
- Wide spacing between sections for adequate hand room while moving up or down the ladder
- Available with optional green, red, blue or white LED rope lighting on all sections

Specs

Chassis Choices

- Available on all Pierce custom chassis (Velocity™, Quantum® and Arrow XT™)

Overall Dimensions

- 39'8" overall length
- Flexible overall height configurations up to 137"
- 96" body width

Ladder Reach

- 105' vertical
- 100' horizontal

Payload Capacity

- 500 lb., wet or dry, full extension flowing 1,000 gpm
- Optional 750 lb. dry, 500 lb. wet full extension flowing 1,000 gpm

Wind & Ice Ratings

- Up to 50 mph winds
- Up to 1/4" thick ice

Stabilizers

- Two (2) sets of H-style: 14' front and rear spread (500 lb. payload), 16' front and rear spread (750 lb. payload)
- Short-jack spread 11' (500 lb. payload), 12' spread (750 lb. payload)
- 12" standard front and rear ground penetration, 18" front and rear ground penetration optional

Pump Range

- Waterous, Hale, or Darley Midship (500 to 2000 gpm) & PTO (250 to 1000 gpm) pumps available

Tank

- 300 to 750 gallon polypropylene tank with a lifetime warranty

Hosebed Capacity

- 1,000' of 5" hose

Storage Capacity

- 150 cubic ft.
- Compartment Weight Ratings 500 lb.

Compartment Depth

- 12" upper (full-depth compartments optional)
- 24" lower

Body Support Substructure

- Pierce exclusive under-slung steel body supports features a neoprene elastomer isolated mount system

Structural Ladder Warranty*

- 20 years

Body Warranty*

- 10 years

* See your Pierce representative for details.